DATA SHEET

TDA8551
1 W BTL audio amplifier with digital volume control

Product specification
Supersedes data of 1997 May 07

1998 Feb 23

1 W BTL audio amplifier with digital volume control

TDA8551

FEATURES

- One pin digital volume control
- Volume setting with UP/DOWN pulses
- Flexibility in use
- Few external components
- Low saturation voltage of output stage
- Standby mode controlled by CMOS compatible levels
- Low standby current
- No switch-on/switch-off plops
- High supply voltage ripple rejection
- Protected against electrostatic discharge
- Outputs short circuit safe to ground, V_P and across the load
- Thermally protected.

GENERAL DESCRIPTION

The TDA8551; TDA8551T is a one channel 1 W Bridge-Tied Load (BTL) audio power amplifier capable of delivering 1 W output power to an 8 Ω load at THD = 10% using a 5 V power supply. The circuit contains a BTL power amplifier, a digital volume control and standby/mute logic. The TDA8551T comes in an 8 pin SO package and the TDA8551 in a 8 pin DIP package.

APPLICATIONS

- Portable consumer products
- Personal computers
- Telephony.

QUICK REFERENCE DATA

SYMBOL	PARAMETER	CONDITIONS	MIN.	TYP.	MAX.	UNIT
V_P	supply voltage		2.7	5	5.5	V
I_q	quiescent current	V_P = 5 V	–	6	10	mA
I_{stb}	standby current		–	–	10	μA
P_o	output power	THD = 10%; R_L = 8 Ω; V_P = 5 V	1	1.4	–	W
G_v	voltage gain		–60	–	+20	dB
n_{vol}	number of volume steps		–	64	–	
THD	total harmonic distortion	P_o = 0.5 W	–	0.15	–	%
SVRR	supply voltage ripple rejection		48	–	–	dB

ORDERING INFORMATION

TYPE NUMBER	PACKAGE		
	NAME	DESCRIPTION	VERSION
TDA8551T	SO8	plastic small outline package; 8 leads; body width 3.9 mm	SOT96-1
TDA8551	DIP8	plastic dual in-line package; 8 leads (300 mil)	SOT97-1

BLOCK DIAGRAM

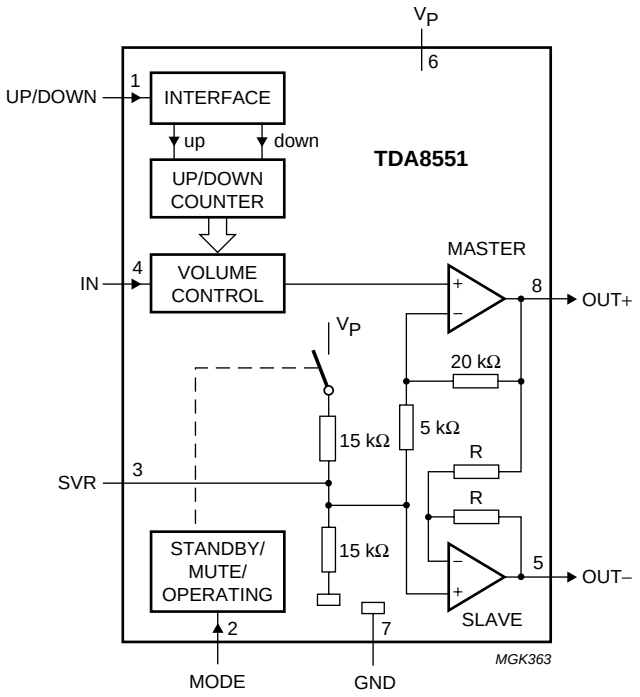

Fig.1 Block diagram.

PINNING

SYMBOL	PIN	DESCRIPTION
UP/DOWN	1	digital trinary input for volume control
MODE	2	digital trinary input for mode selection (standby, mute, operating)
SVR	3	half supply voltage, decoupling ripple rejection
IN	4	audio input
OUT−	5	negative loudspeaker output terminal
V_P	6	supply voltage
GND	7	ground
OUT+	8	positive loudspeaker output terminal

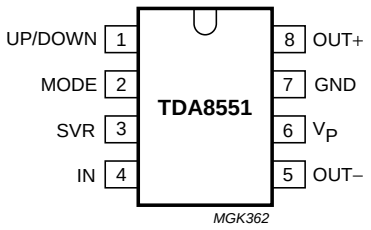

Fig.2 Pin configuration.

FUNCTIONAL DESCRIPTION

The TDA8551; TDA8551T is a 1 W BTL audio power amplifier capable of delivering 1 W output power to an 8 Ω load at THD = 10% using a 5 V power supply. The gain of the amplifier can be set by the digital volume control. In the maximum volume setting the gain is 20 dB. Using the MODE pin the device can be switched to the standby condition, the mute condition and the normal operating condition. The device is protected by an internal thermal shutdown protection mechanism.

Power amplifier

The power amplifier is a Bridge Tied Load (BTL) amplifier with a complementary CMOS output stage. The total voltage loss for both output power MOS transistors is within 1 V and with a 5 V supply and an 8 Ω loudspeaker an output power of 1 W can be delivered. The total gain of this power amplifier is internally fixed at 20 dB.

Volume control

The volume control operates as a digital controlled attenuator between the audio input pin and the power amplifier. In the maximum volume control setting the attenuation is 0 dB and in the minimum volume control setting the typical attenuation is 80 dB. The attenuation can be set in 64 steps by the UP/DOWN pin.
This UP/DOWN pin is a trinary input:

- Floating UP/DOWN pin: volume remains unchanged
- Negative pulses: setting volume towards minimum
- Positive pulses: setting volume towards maximum.

Each pulse on the UP/DOWN pin results in a change in gain of 80/64 = 1.25 dB (typical value). In the basic application the UP/DOWN pin is switched to ground or V_P by a double push-button. When the supply voltage is initially connected, after a complete removal of the supply, the initial state of the volume control is an attenuation of 40 dB (low volume), so the gain of the total amplifier is −20 dB. After powering-up, some positive pulses have to be applied to the UP/DOWN pin for turning up to listening volume. When the device is switched with the MODE select pin to the mute or the standby condition, the volume control attenuation setting remains on its value, assumed that the voltage on pin V_P does not fall below the minimum supply voltage. After switching the device back to the operation mode, the previous volume setting is maintained.

Mode select pin

The device is in the standby mode (with a very low current consumption) if the voltage at the MODE pin is between V_P and $V_P - 0.5$ V. At a mode select voltage level of less than 0.5 V the amplifier is fully operational. In the range between 1 V and $V_P - 1.4$ V the amplifier is in the mute condition. The mute condition is useful for using it as a ‘fast mute’; in this mode output signal is suppressed, while the volume setting remains at its value. It is advised to keep the device in the mute condition while the input capacitor is being charged. This can be done by holding the MODE pin at a level of $0.5V_P$, or by waiting approximately 100 ms before giving the first volume-UP pulses.

LIMITING VALUES

In accordance with the Absolute Maximum Rating System (IEC 134).

SYMBOL	PARAMETER	CONDITIONS	MIN.	MAX.	UNIT
V_P	supply voltage		−0.3	+5.5	V
V_I	input voltage		−0.3	V_P + 0.3	V
I_{ORM}	repetitive peak output current		−	1	A
T_{stg}	storage temperature		−55	+150	°C
T_{amb}	operating temperature		−40	+85	°C
V_{sc}	AC and DC short-circuit safe voltage		−	5.5	V
P_{tot}	maximum power dissipation	SO8	−	0.8	W
		DIP8	−	1.2	W

QUALITY SPECIFICATION

Quality according to *"SNW-FQ-611 part E"*, if this type is used as an audio amplifier. Quality specifications are listed in the *"Quality reference handbook"*, order number 9397 750 00192.

THERMAL CHARACTERISTICS

SYMBOL	PARAMETER	CONDITIONS	VALUE	UNIT
$R_{th\ j\text{-}a}$	thermal resistance from junction to ambient	in free air		
	SO8		160	K/W
	DIP8		100	K/W

CHARACTERISTICS

V_P = 5 V; T_{amb} = 25 °C; R_L = 8 Ω; V_{MODE} = 0 V; total gain setting at +7 dB (unless otherwise specified); measured in test circuit of Fig.4.

SYMBOL	PARAMETER	CONDITIONS	MIN.	TYP.	MAX.	UNIT
DC characteristics						
V_P	supply voltage		2.7	5	5.5	V
I_q	quiescent current	$R_L = \infty$; note 1	–	6	10	mA
I_{stb}	standby current	$V_{MODE} = V_P$	–	–	10	μA
V_O	DC output voltage	note 2	–	2.5	–	V
$\lvert V_{OUT+} - V_{OUT-} \rvert$	differential output offset		–	–	50	mV
Mode select pin						
V_{MODE}	input voltage	standby mode	$V_P - 0.5$	–	V_P	V
		mute mode	1	–	$V_P - 1.4$	V
		operating mode	0	–	0.5	V
I_{MODE}	input current	$0 < V_{MODE} < V_P$	–	–	100	nA
α	mute attenuation	note 3	80	90	–	dB
Volume control						
t_{rep}	pulse repetition time		100	–	–	ns
$V_{th(UP)}$	UP/DOWN pin **up** threshold level		4.2	–	V_P	V
$V_{float(max)}$	UP/DOWN pin floating high level		–	–	3.4	V
$V_{float(min)}$	UP/DOWN pin floating low level		1.0	–	–	V
$V_{th(DOWN)}$	UP/DOWN pin **down** threshold level		0	–	0.6	V
$I_{UP/DOWN}$	input current UP/DOWN pin	$0 < V_{UP/DOWN} < V_P$	–	–	200	μA
$G_{v(max)}$	maximum voltage gain (including power amplifier)		19	20	21	dB
$G_{v(min)}$	minimum voltage gain (including power amplifier)		−62	−60	−58	dB
n_{vol}	number of volume steps		–	64	–	
ΔG_v	voltage gain variation per step		–	1.25	–	dB
Z_i	input impedance		14	20	–	kΩ
$V_{i(rms)(max)}$	maximum input voltage (RMS value)		–	–	2.0	V
AC characteristics (f = 1 kHz)						
P_o	output power	THD = 10%	1	1.4	–	W
		THD = 0.5%	0.6	1.0	–	W
THD	total harmonic distortion	P_o = 0.5 W; note 4	–	0.15	0.5	%
$V_{n(o)}$	noise output voltage	note 5	–	60	100	μV
SVRR	supply voltage ripple rejection	note 6	48	53	–	dB
$V_{i(IN)(max)}$	maximum input voltage on pin IN	THD = 1%; G_v = −50 dB to 0 dB	–	–	2.0	V

Notes to the Characteristics

1. With a load connected at the outputs the quiescent current will increase, the maximum of this increase being equal to the DC output offset voltage divided by R_L.
2. The DC output voltage with respect to ground is approximately $0.5V_P$.
3. Output voltage in mute position is measured with an input of 1 V (RMS), including noise, in a bandwidth of 20 kHz.
4. Total gain setting at +20 dB.
5. The noise output voltage is measured at the output in a frequency band from 20 Hz to 20 kHz (unweighted), input source impedance $R_{source} = 0\ \Omega$.
6. Supply voltage ripple rejection is measured at the output, with a source impedance of $R_{source} = 0\ \Omega$ at the input. The ripple voltage is a sine wave with frequency of 1 kHz and an amplitude of 100 mV (RMS) is applied to the positive supply rail.

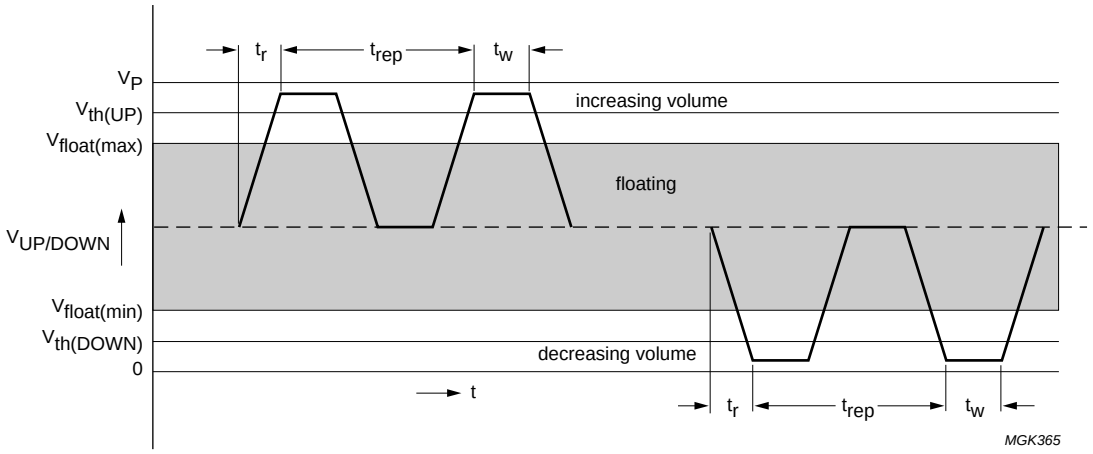

The rise time (t_r) and the width of the pulse (t_w) are not critical.

Fig.3 Timing UP/DOWN pin.

TEST AND APPLICATION INFORMATION

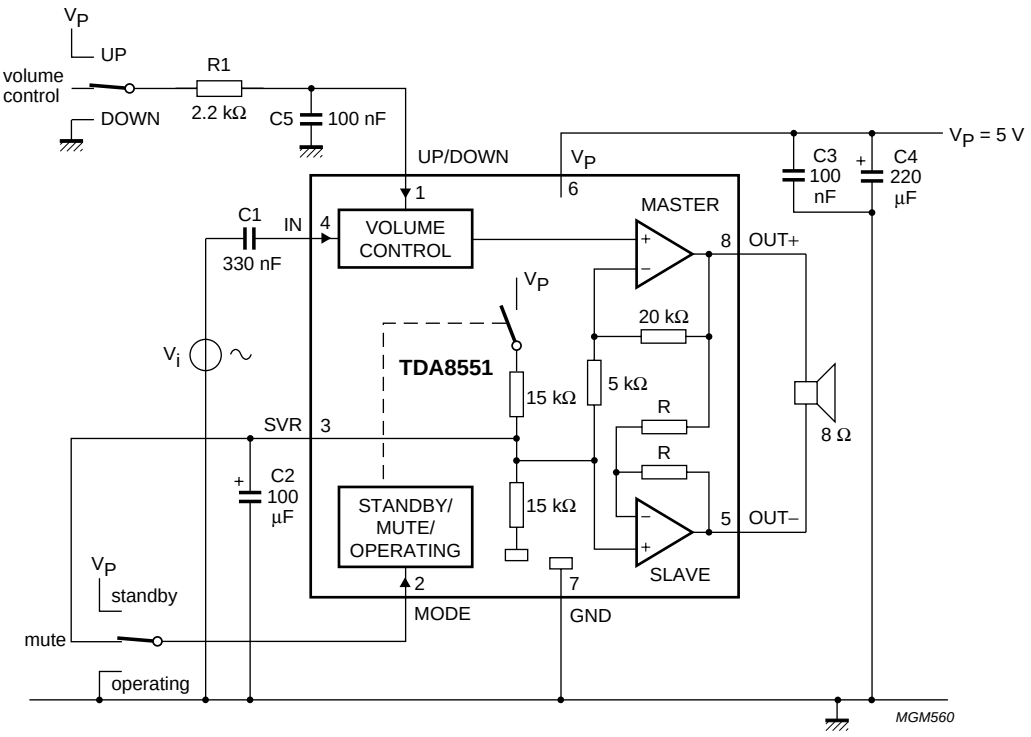

Fig.4 Test and application circuit.

Reduction of the value of capacitor C2 results in a decrease of the SVRR performance at low frequencies (see Fig.9).

The UP/DOWN pin can be driven by a 3-state logic output stage (microcontroller) without extra external components. If the UP/DOWN pin is driven by push-buttons, then it is advised to have an RC filter between the buttons and the UP/DOWN pin. Advised values for the RC filter are 2.2 kΩ and 100 nF.

The volume control circuit responds to the trailing edge of the pulse on the volume pin; connecting to V_P results in a one step (1.25 dB) higher gain; connecting to ground results in a one step lower gain.

To avoid audible plops while switching the supply voltage on and off pin MODE has to be connected to V_P (standby condition) during charge or discharge of the input and SVRR capacitors.

The measured thermal resistance of the IC package is highly dependent on the configuration and size of the application board. Data may not be comparable between different semiconductor manufacturers because the application boards and test methods are not standardized yet. In addition, the thermal performance of packages for a specific application may be different than presented here, because the configuration of the application boards (copper area) may be different. NXP Semiconductors uses FR-4 type application boards with 1 oz. copper traces with solder coating. The measurements have been carried out with vertical placed boards.

When a practical PCB layout is used with wider copper tracks and some extra copper added both to the IC pin connections and underneath the IC, the thermal resistance from junction to ambient can be reduced. Without these measures $R_{th\ j\text{-}a}$ = 160 K/W for the SO8 package; see Chapter “Thermal characteristics”. The power dissipation can be calculated as follows:

$$P = \frac{T_{amb}}{R_{th\ j\text{-}a}}$$

For a maximum ambient temperature of 50 °C, V_P = 5 V and R_L = 8 Ω this results in a worst case sine wave dissipation of 0.63 W.

Figures 5 to 15 represent test results obtained while using the test circuit given in Fig.4. The following test conditions apply: T_{amb} = 25 °C; V_P = 5 V; f = 1 kHz; R_L = 8 Ω; G_v = 20 dB; audio bandwidth from 22 Hz to 22 kHz (except for Figs 8 and 9); unless otherwise specified.

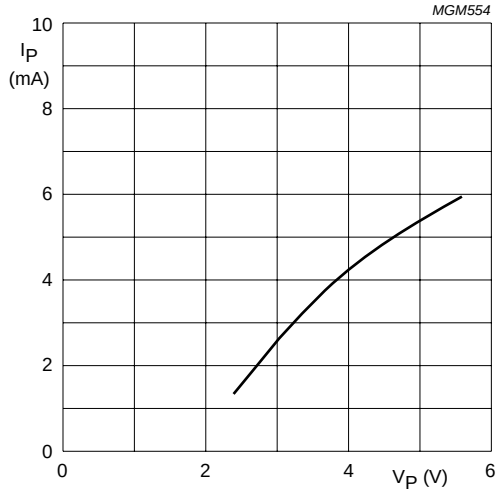

Fig.5 Supply current as a function of supply voltage.

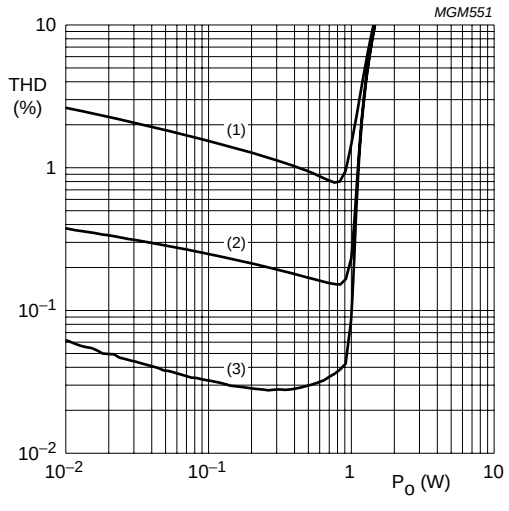

(1) f = 10 kHz.
(2) f = 1 kHz.
(3) f = 100 Hz.

Fig.6 Total harmonic distortion as a function of output power at different frequencies.

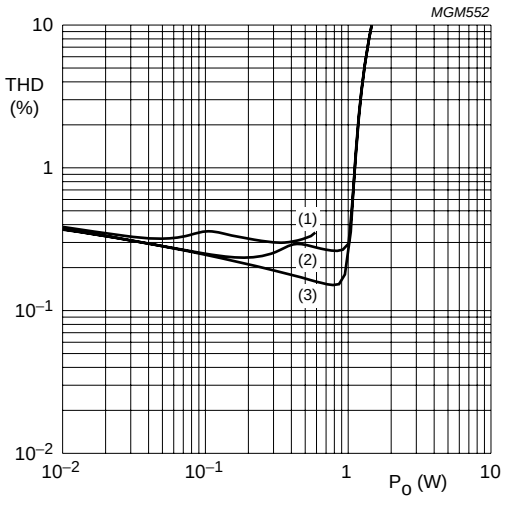

f = 1 kHz.
(1) G_v = 0 dB.
(2) G_v = 7 dB.
(3) G_v = 20 dB.

Fig.7 Total harmonic distortion as a function of output power at different gains.

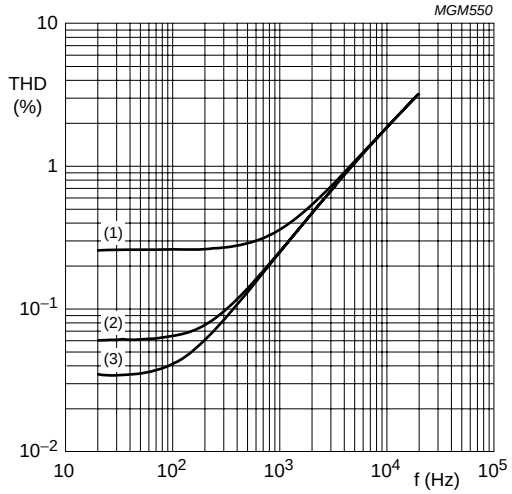

P_o = 0.1 W.
(1) G_v = 0 dB.
(2) G_v = 7 dB.
(3) G_v = 20 dB.

Fig.8 Total harmonic distortion as a function of frequency at different gains.

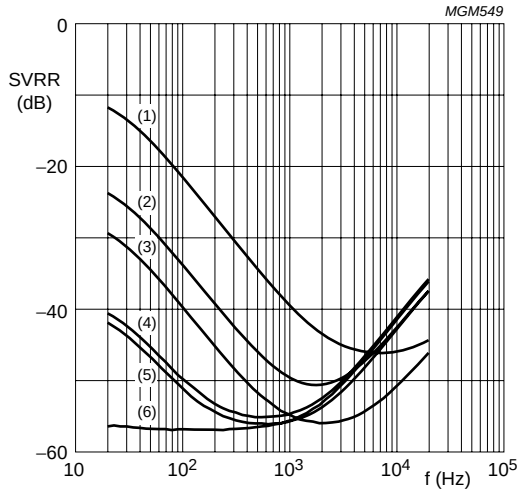

V_{ripple} = 100 mV.
R_{source} = 0 Ω.
(1) C2 = 10 μF; G_v = 20 dB.
(2) C2 = 10 μF; G_v = 7 dB.
(3) C2 = 100 μF; G_v = 20 dB.
(4) C2 = 10 μF; G_v = –10 dB.
(5) C2 = 100 μF; G_v = 7 dB.
(6) C2 = 100 μF; G_v = –10 dB.

Fig.9 Supply voltage ripple rejection as a function of frequency.

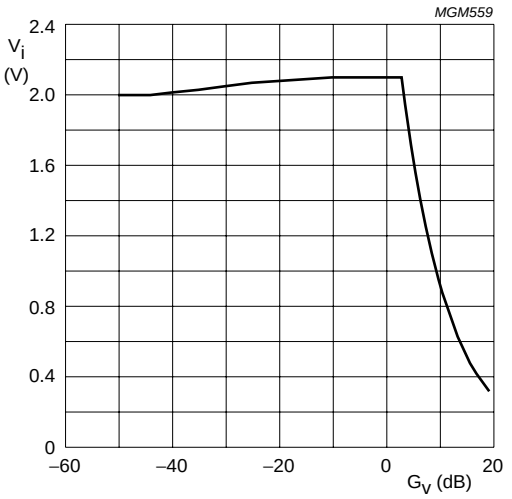

THD = 1 %.

Fig.10 Input voltage as a function of voltage gain.

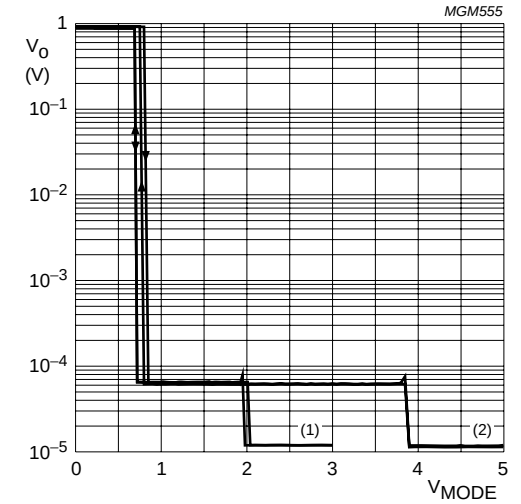

(1) V_P = 3 V.
(2) V_P = 5 V.

Fig.11 Output voltage as a function of mode select input voltage at different supply voltages.

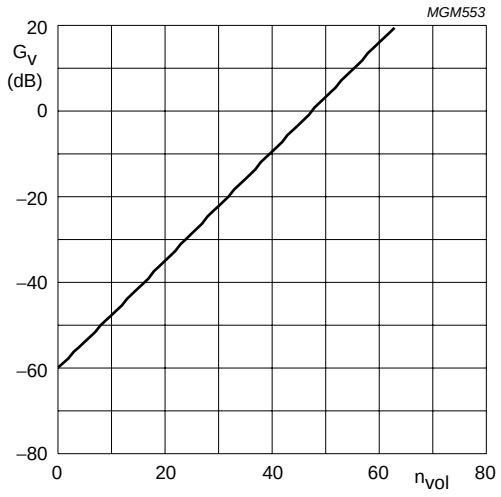

Fig.12 Volume gain as a function of volume steps.

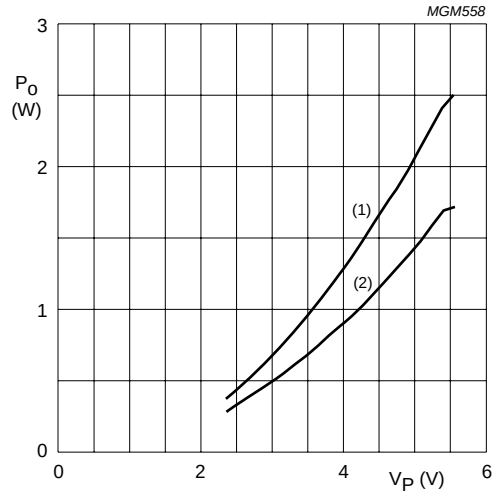

THD = 10 %.
(1) R_L = 4 Ω.
(2) R_L = 8 Ω.

$P_{o(max)}$ is limited by P_{tot} and a maximum available repetitive peak output current of 1 A.

Fig.13 Output power as a function of supply voltage.

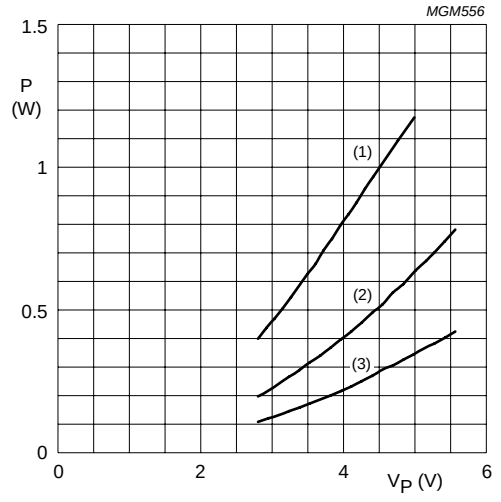

(1) R_L = 4 Ω.
(2) R_L = 8 Ω.
(3) R_L = 16 Ω.

Fig.14 Power dissipation as a function of supply voltage.

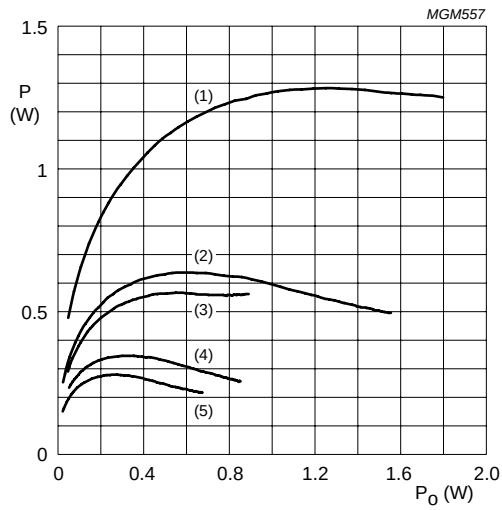

(1) V_P = 5 V; R_L = 4 Ω.
(2) V_P = 5 V; R_L = 8 Ω.
(3) V_P = 3.3 V; R_L = 4 Ω.
(4) V_P = 5 V; R_L = 16 Ω.
(5) V_P = 3.3 V; R_L = 8 Ω.

Fig.15 Power dissipation as a function of output power.

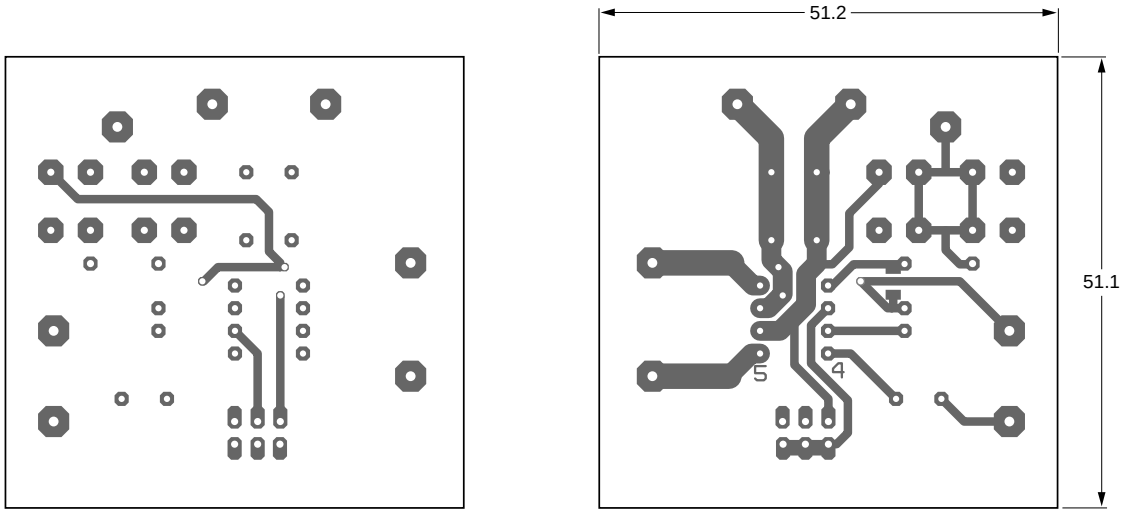

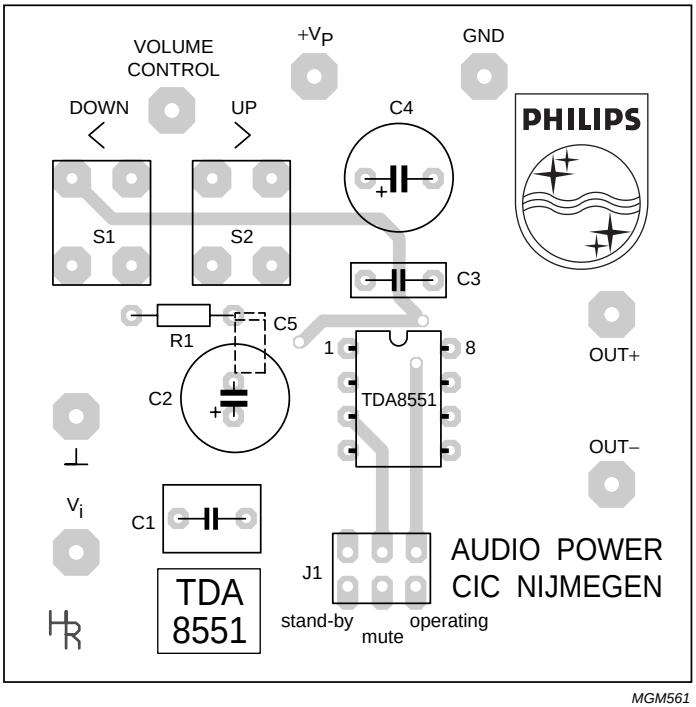

Dimensions in mm.

Fig.16 Layout of printed-circuit board.

PACKAGE OUTLINES

SO8: plastic small outline package; 8 leads; body width 3.9 mm **SOT96-1**

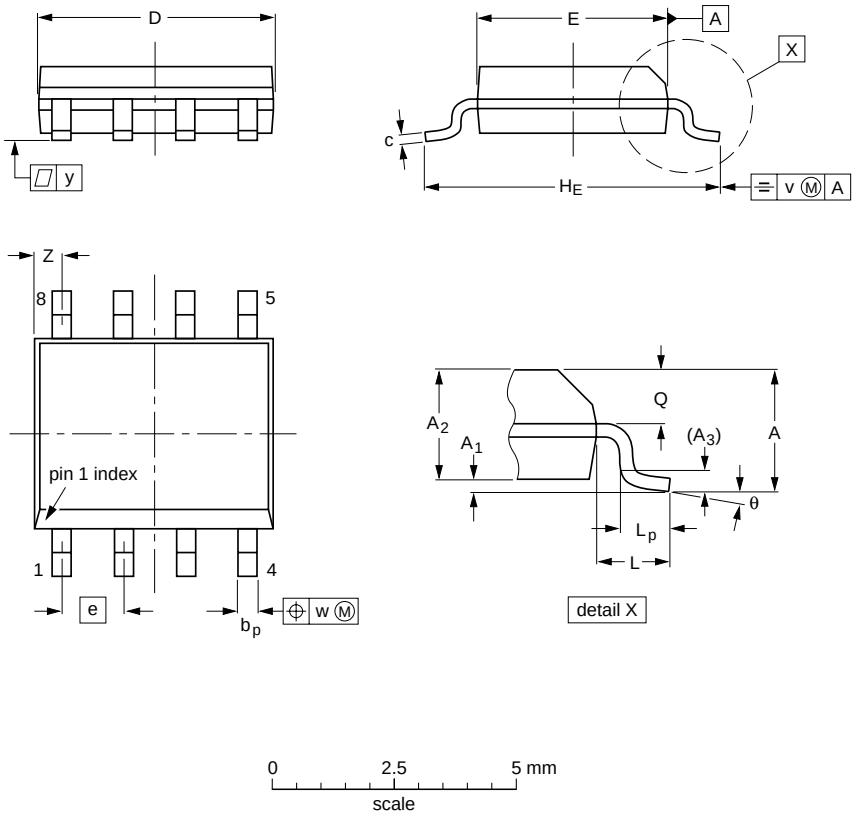

DIMENSIONS (inch dimensions are derived from the original mm dimensions)

UNIT	A max.	A_1	A_2	A_3	b_p	c	$D^{(1)}$	$E^{(2)}$	e	H_E	L	L_p	Q	v	w	y	$Z^{(1)}$	θ
mm	1.75	0.25 0.10	1.45 1.25	0.25	0.49 0.36	0.25 0.19	5.0 4.8	4.0 3.8	1.27	6.2 5.8	1.05	1.0 0.4	0.7 0.6	0.25	0.25	0.1	0.7 0.3	8° 0°
inches	0.069	0.010 0.004	0.057 0.049	0.01	0.019 0.014	0.0100 0.0075	0.20 0.19	0.16 0.15	0.05	0.244 0.228	0.041	0.039 0.016	0.028 0.024	0.01	0.01	0.004	0.028 0.012	

Notes

1. Plastic or metal protrusions of 0.15 mm (0.006 inch) maximum per side are not included.
2. Plastic or metal protrusions of 0.25 mm (0.01 inch) maximum per side are not included.

OUTLINE VERSION	REFERENCES				EUROPEAN PROJECTION	ISSUE DATE
	IEC	JEDEC	JEITA			
SOT96-1	076E03	MS-012				~~99-12-27~~ 03-02-18

DIP8: plastic dual in-line package; 8 leads (300 mil) **SOT97-1**

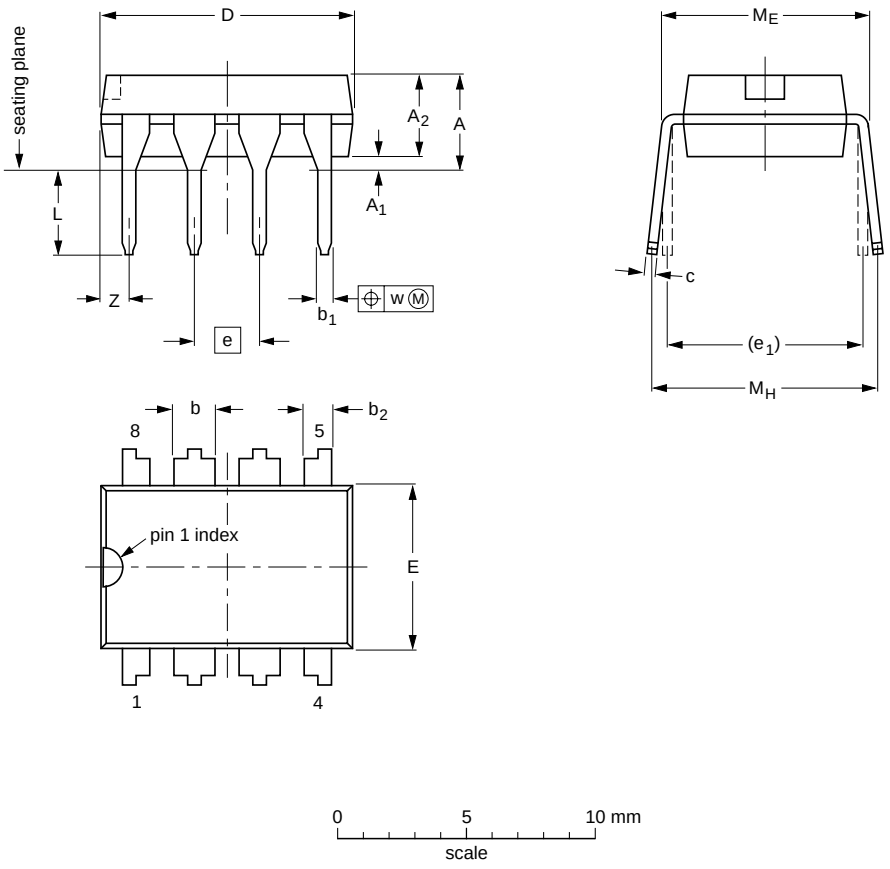

DIMENSIONS (inch dimensions are derived from the original mm dimensions)

UNIT	A max.	A_1 min.	A_2 max.	b	b_1	b_2	c	D (1)	E (1)	e	e_1	L	M_E	M_H	w	Z (1) max.
mm	4.2	0.51	3.2	1.73 1.14	0.53 0.38	1.07 0.89	0.36 0.23	9.8 9.2	6.48 6.20	2.54	7.62	3.60 3.05	8.25 7.80	10.0 8.3	0.254	1.15
inches	0.17	0.02	0.13	0.068 0.045	0.021 0.015	0.042 0.035	0.014 0.009	0.39 0.36	0.26 0.24	0.1	0.3	0.14 0.12	0.32 0.31	0.39 0.33	0.01	0.045

Note

1. Plastic or metal protrusions of 0.25 mm (0.01 inch) maximum per side are not included.

OUTLINE VERSION	REFERENCES				EUROPEAN PROJECTION	ISSUE DATE
	IEC	JEDEC	JEITA			
SOT97-1	050G01	MO-001	SC-504-8			~~99-12-27~~ 03-02-13

SOLDERING

Introduction

There is no soldering method that is ideal for all IC packages. Wave soldering is often preferred when through-hole and surface mounted components are mixed on one printed-circuit board. However, wave soldering is not always suitable for surface mounted ICs, or for printed-circuits with high population densities. In these situations reflow soldering is often used.

This text gives a very brief insight to a complex technology. A more in-depth account of soldering ICs can be found in our *"IC Package Databook"* (order code 9398 652 90011).

DIP

Soldering by dipping or by wave

The maximum permissible temperature of the solder is 260 °C; solder at this temperature must not be in contact with the joint for more than 5 seconds. The total contact time of successive solder waves must not exceed 5 seconds.

The device may be mounted up to the seating plane, but the temperature of the plastic body must not exceed the specified maximum storage temperature ($T_{stg\ max}$). If the printed-circuit board has been pre-heated, forced cooling may be necessary immediately after soldering to keep the temperature within the permissible limit.

Repairing soldered joints

Apply a low voltage soldering iron (less than 24 V) to the lead(s) of the package, below the seating plane or not more than 2 mm above it. If the temperature of the soldering iron bit is less than 300 °C it may remain in contact for up to 10 seconds. If the bit temperature is between 300 and 400 °C, contact may be up to 5 seconds.

SO

Reflow soldering

Reflow soldering techniques are suitable for all SO packages.

Reflow soldering requires solder paste (a suspension of fine solder particles, flux and binding agent) to be applied to the printed-circuit board by screen printing, stencilling or pressure-syringe dispensing before package placement.

Several techniques exist for reflowing; for example, thermal conduction by heated belt. Dwell times vary between 50 and 300 seconds depending on heating method. Typical reflow temperatures range from 215 to 250 °C.

Preheating is necessary to dry the paste and evaporate the binding agent. Preheating duration: 45 minutes at 45 °C.

Wave soldering

Wave soldering techniques can be used for all SO packages if the following conditions are observed:

- A double-wave (a turbulent wave with high upward pressure followed by a smooth laminar wave) soldering technique should be used.
- The longitudinal axis of the package footprint must be parallel to the solder flow.
- The package footprint must incorporate solder thieves at the downstream end.

During placement and before soldering, the package must be fixed with a droplet of adhesive. The adhesive can be applied by screen printing, pin transfer or syringe dispensing. The package can be soldered after the adhesive is cured.

Maximum permissible solder temperature is 260 °C, and maximum duration of package immersion in solder is 10 seconds, if cooled to less than 150 °C within 6 seconds. Typical dwell time is 4 seconds at 250 °C.

A mildly-activated flux will eliminate the need for removal of corrosive residues in most applications.

Repairing soldered joints

Fix the component by first soldering two diagonally-opposite end leads. Use only a low voltage soldering iron (less than 24 V) applied to the flat part of the lead. Contact time must be limited to 10 seconds at up to 300 °C. When using a dedicated tool, all other leads can be soldered in one operation within 2 to 5 seconds between 270 and 320 °C.

DATA SHEET STATUS

DOCUMENT STATUS[1]	PRODUCT STATUS[2]	DEFINITION
Objective data sheet	Development	This document contains data from the objective specification for product development.
Preliminary data sheet	Qualification	This document contains data from the preliminary specification.
Product data sheet	Production	This document contains the product specification.

Notes

1. Please consult the most recently issued document before initiating or completing a design.
2. The product status of device(s) described in this document may have changed since this document was published and may differ in case of multiple devices. The latest product status information is available on the Internet at URL http://www.nxp.com.

DISCLAIMERS

Limited warranty and liability — Information in this document is believed to be accurate and reliable. However, NXP Semiconductors does not give any representations or warranties, expressed or implied, as to the accuracy or completeness of such information and shall have no liability for the consequences of use of such information.

In no event shall NXP Semiconductors be liable for any indirect, incidental, punitive, special or consequential damages (including - without limitation - lost profits, lost savings, business interruption, costs related to the removal or replacement of any products or rework charges) whether or not such damages are based on tort (including negligence), warranty, breach of contract or any other legal theory.

Notwithstanding any damages that customer might incur for any reason whatsoever, NXP Semiconductors' aggregate and cumulative liability towards customer for the products described herein shall be limited in accordance with the *Terms and conditions of commercial sale* of NXP Semiconductors.

Right to make changes — NXP Semiconductors reserves the right to make changes to information published in this document, including without limitation specifications and product descriptions, at any time and without notice. This document supersedes and replaces all information supplied prior to the publication hereof.

Suitability for use — NXP Semiconductors products are not designed, authorized or warranted to be suitable for use in life support, life-critical or safety-critical systems or equipment, nor in applications where failure or malfunction of an NXP Semiconductors product can reasonably be expected to result in personal injury, death or severe property or environmental damage. NXP Semiconductors accepts no liability for inclusion and/or use of NXP Semiconductors products in such equipment or applications and therefore such inclusion and/or use is at the customer's own risk.

Applications — Applications that are described herein for any of these products are for illustrative purposes only. NXP Semiconductors makes no representation or warranty that such applications will be suitable for the specified use without further testing or modification.

Customers are responsible for the design and operation of their applications and products using NXP Semiconductors products, and NXP Semiconductors accepts no liability for any assistance with applications or customer product design. It is customer's sole responsibility to determine whether the NXP Semiconductors product is suitable and fit for the customer's applications and products planned, as well as for the planned application and use of customer's third party customer(s). Customers should provide appropriate design and operating safeguards to minimize the risks associated with their applications and products.

NXP Semiconductors does not accept any liability related to any default, damage, costs or problem which is based on any weakness or default in the customer's applications or products, or the application or use by customer's third party customer(s). Customer is responsible for doing all necessary testing for the customer's applications and products using NXP Semiconductors products in order to avoid a default of the applications and the products or of the application or use by customer's third party customer(s). NXP does not accept any liability in this respect.

Limiting values — Stress above one or more limiting values (as defined in the Absolute Maximum Ratings System of IEC 60134) will cause permanent damage to the device. Limiting values are stress ratings only and (proper) operation of the device at these or any other conditions above those given in the Recommended operating conditions section (if present) or the Characteristics sections of this document is not warranted. Constant or repeated exposure to limiting values will permanently and irreversibly affect the quality and reliability of the device.

Terms and conditions of commercial sale — NXP Semiconductors products are sold subject to the general terms and conditions of commercial sale, as published at http://www.nxp.com/profile/terms, unless otherwise agreed in a valid written individual agreement. In case an individual agreement is concluded only the terms and conditions of the respective agreement shall apply. NXP Semiconductors hereby expressly objects to applying the customer's general terms and conditions with regard to the purchase of NXP Semiconductors products by customer.

No offer to sell or license — Nothing in this document may be interpreted or construed as an offer to sell products that is open for acceptance or the grant, conveyance or implication of any license under any copyrights, patents or other industrial or intellectual property rights.

Export control — This document as well as the item(s) described herein may be subject to export control regulations. Export might require a prior authorization from national authorities.

Quick reference data — The Quick reference data is an extract of the product data given in the Limiting values and Characteristics sections of this document, and as such is not complete, exhaustive or legally binding.

Non-automotive qualified products — Unless this data sheet expressly states that this specific NXP Semiconductors product is automotive qualified, the product is not suitable for automotive use. It is neither qualified nor tested in accordance with automotive testing or application requirements. NXP Semiconductors accepts no liability for inclusion and/or use of non-automotive qualified products in automotive equipment or applications.

In the event that customer uses the product for design-in and use in automotive applications to automotive specifications and standards, customer (a) shall use the product without NXP Semiconductors' warranty of the product for such automotive applications, use and specifications, and (b) whenever customer uses the product for automotive applications beyond NXP Semiconductors' specifications such use shall be solely at customer's own risk, and (c) customer fully indemnifies NXP Semiconductors for any liability, damages or failed product claims resulting from customer design and use of the product for automotive applications beyond NXP Semiconductors' standard warranty and NXP Semiconductors' product specifications.

NXP Semiconductors

provides High Performance Mixed Signal and Standard Product solutions that leverage its leading RF, Analog, Power Management, Interface, Security and Digital Processing expertise

Customer notification

This data sheet was changed to reflect the new company name NXP Semiconductors, including new legal definitions and disclaimers. No changes were made to the technical content, except for package outline drawings which were updated to the latest version.

Contact information

For additional information please visit: **http://www.nxp.com**
For sales offices addresses send e-mail to: **salesaddresses@nxp.com**

© NXP B.V. 2010

All rights are reserved. Reproduction in whole or in part is prohibited without the prior written consent of the copyright owner.

The information presented in this document does not form part of any quotation or contract, is believed to be accurate and reliable and may be changed without notice. No liability will be accepted by the publisher for any consequence of its use. Publication thereof does not convey nor imply any license under patent- or other industrial or intellectual property rights.

Printed in The Netherlands 545102/25/02/pp18 Date of release: 1998 Feb 23 Document order number: 9397 750 03173